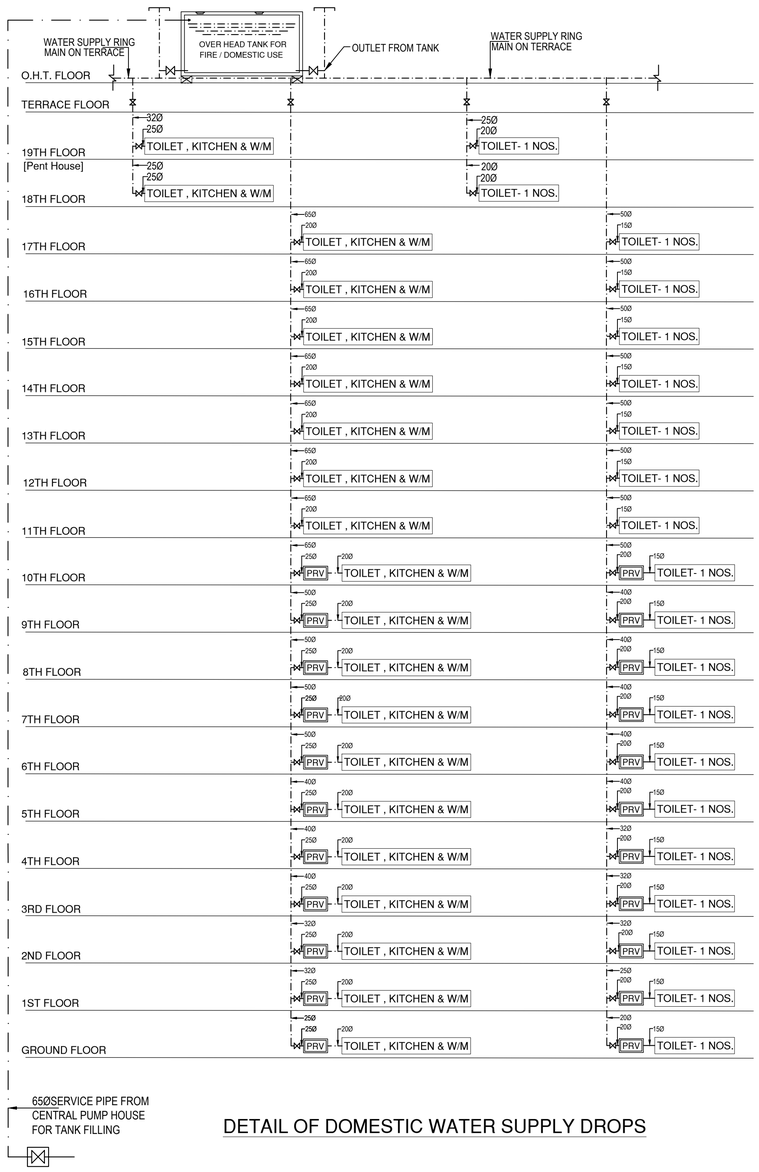

DETAIL OF DOMESTIC WATER SUPPLY DROPS

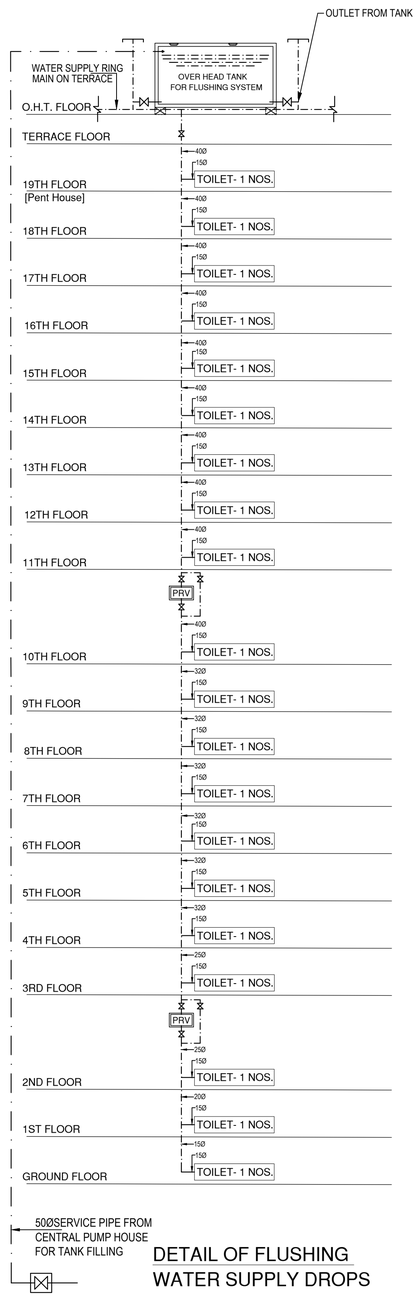

DETAIL OF FLUSHING WATER SUPPLY DROPS

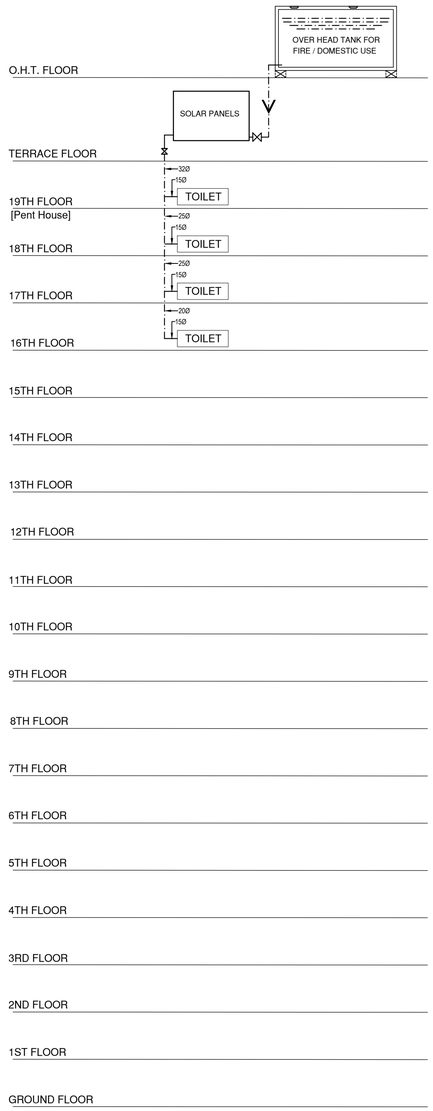

DETAIL OF SOLAR WATER SUPPLY DROPS

rev. no.	date	revision
..	..	..

project
PROPOSED GROUP HOUSING COLONY
MEASURING 19.362, ACRE LICENSE NO. -85 OF 2008, DATED 11.04.08 IN SECTOR-82, GURGAON MANESAR URBAN COMPLEX.

title
WATER SUPPLY SYSTEM
BLOCK 'B & C' (G+18+PH)

subtitle
PLUMBING SCHEMATIC DIAGRAM

Drawing Released For :
- ☐ APPROVAL
- ■ SUBMISSION
- ☐ ADVANCE COPY
- ☐ CONSTRUCTION

Drg. No : CASABILL / WSS / 03

Scale : N.T.S.

Date : JUNE 2011

Drawn By : Jagdish Kmr

Design By : Ashish Singhal

Ckd By : Anand Havelia

architects
GIAN P. MATHUR & ASSOCIATES PVT. LTD.
ARCHITECTS, ENGINEERS AND PLANNERS
C-55,EAST OF KAILASH, NEW DELHI -110065
PH- 011- 46599599

services consultant
Consummate Engineering Services (P) Ltd.
CES
A - 48, Sector - 52, Noida - 201 307
Tel : (0120) 4233034 / 4233035 Telefax : (0120) 2585577
3 / 179, Vivek Khand, Gomti Nagar, Lucknow - 226 010
Tel : (0522) 4005455 / 2395487 Telefax : (0522) 2395487
e mail : mail@cespl.in